E52: Total Syntheses of (±)-Actinophyllic Acid

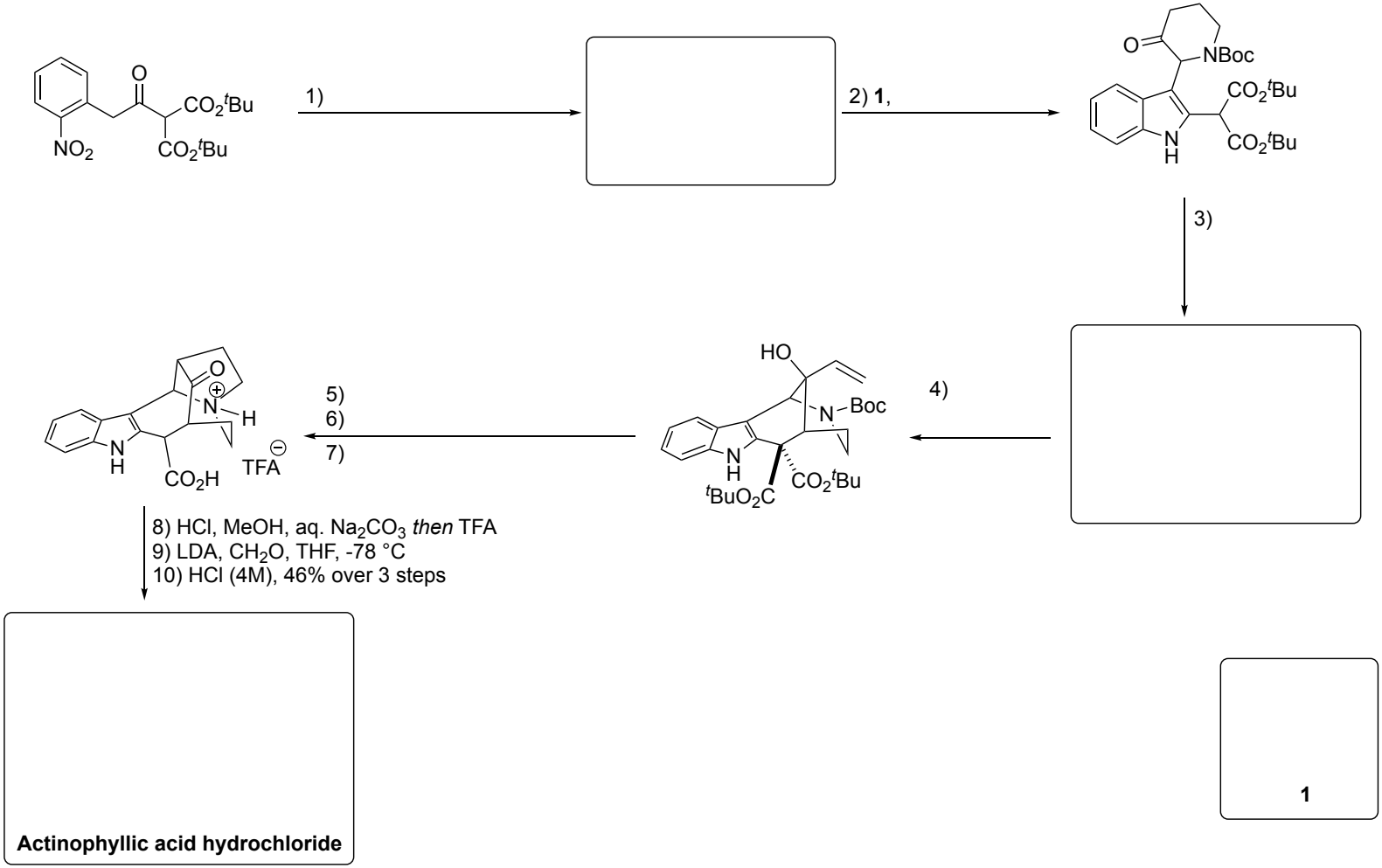

[1] C. L. Martin, L. E. Overman, J. M. Rhode, *J. Am. Chem. Soc.* **2008**, *130*, 7568–7569.

University of Basel

Sparr Group Seminar
26.10.2017
Reto Witzig

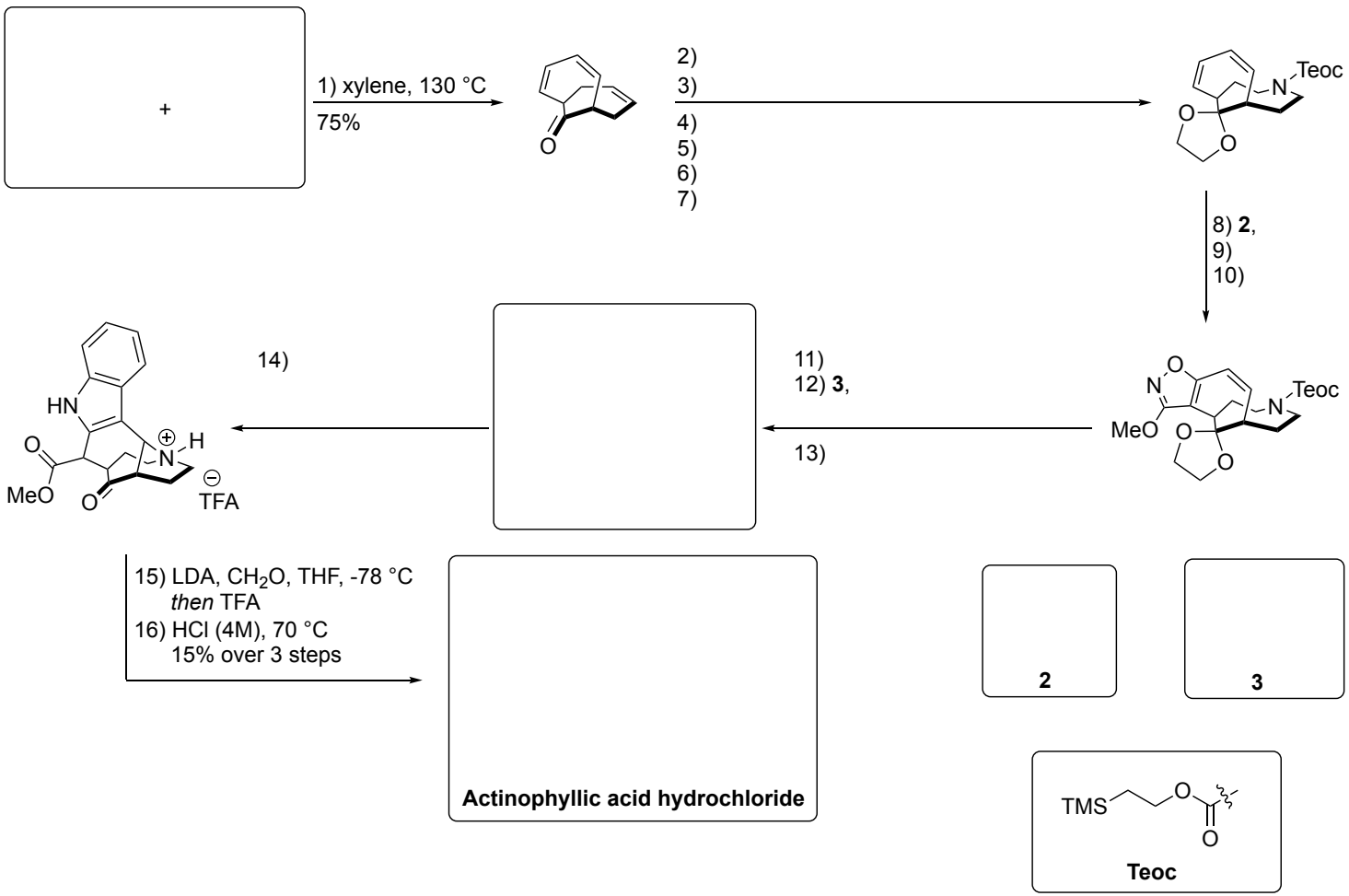

[2] Y. Yoshii, H. Tokuyama, D. Y.-K. Chen, *Angew. Chem. Int. Ed.* **2017**, *56*, 12277–12281.

University of Basel

Sparr Group Seminar
26.10.2017
Reto Witzig